Inox Series Installation Manual

807682 – Inox 230

807683 – Inox 240

807684 – Inox 250

ClayTech 3 YEAR WARRANTY

ClayTech Pumps COMPLIES TO AUSTRALIAN & NEW ZEALAND ELECTRICAL STANDARDS

ClayTech Pumps APPROVED FOR DRINKING WATER AS/NZS 4020

Congratulations on purchasing this high quality Claytech product. Please take a minute to read these installation and important safety instructions before using your new equipment.

1. Contents

1. **Contents** 2
2. **Symbols used in this manual** 2
3. **Warnings** 3
4. **Standards and Approvals** 3
5. **Technical Specifications** 4
6. **Electrical Connections** 5
7. **Cautions** 5
8. **General installation notes** 6
9. **Intake (suction) piping notes** 6
10. **Priming and Operation** 7
11. **Warranties – Terms and Conditions** 8
12. **Trouble Shooting Guide** 9

2. Symbols used in this manual

	Warning - Electrical safety
	Warning – Potential consequences of use outside of intended application(s). Includes environmental condition warnings.
	Mandatory warning
	Warning to disconnect power
	Read carefully

3. Warnings

	Caution Before putting your pump unit into operation, thoroughly read and follow these instructions. For safety reasons, the pumping unit is not to be used by people who have not previously read the instructions.
	Prior to starting installation or any maintenance the pump must be disconnected from the power supply and pressure relieved from the system including controller, pump and associated pipework.
	Any changes or modification to the wiring must be carried out by suitably qualified personnel.
	A qualified electrician should correctly size and install circuit breakers to protect the power supply. The fitment of additional surge protection is recommended.
	Never open the controller cover or pump terminal box cover while controller is connected to electrical supply.
	This appliance is not intended for use by persons (including children) with reduced physical, sensory or mental capabilities, or lack of experience and knowledge, unless they have been given supervision or instruction concerning use of the appliance by a person responsible for their safety. Children should be supervised to ensure that they do not play with the appliance.
	To avoid excessive thermal shock to the motor the pump should not start more than 20 times in any one hour period.
	Ensure that the installation will comply with all applicable local regulations.

4. Standards and Approvals

SAA APPROVALS	**SAA Approvals** is accredited by the Joint Accreditation Service of Australia and New Zealand (JAS-ANZ) as a third party certification body to issue of Certificates of Approval for declared and non-declared electrical equipment that has proven to comply with the safety requirements of the applicable Australian Standard.
ClayTech Pumps APPROVED FOR DRINKING WATER AS/NZS 4020	Pumps that carry the AS/**NZ4020 Drinking Water Approval** demonstrate compliance with requirements of Australia & New Zealand Standards of products that come into contact with water intended for human consumption. This approval also ensures that the water coming from the pump will not be contaminated by toxic materials or metals. It also means the water will not support the growth of micro-organisms and will not cause a change in taste or appearance.
CE	**CE marking** is a certification mark that indicates conformity with health, safety and environment. The CE marketing represents a manufacturer's declaration that products comply with the EU's New Approach Directives. These directives not only apply to products within the EU but also for products that are manufactured in or designed to be sold in the EEA.

5. Technical Specifications

SPECIFICATIONS			
ITEM CODE	**807682**	**807683**	**807684**
Model	**INOX 230**	**INOX 240 A**	**INOX 250 A**
Maximum head	35m	48m	60m
Maximum flow	100 lpm	100 lpm	100 lpm
Input power	220 (-6%) - 240V (+6%) 1ph 50Hz		
Motor	Asynchronous TEFC motor with in-built auto reset thermal overload		
Motor duty	Continuous		
IP Rating / Insulation	Ingress Protection - IPX4 / F Class Motor Insulation		
Motor Rating P2 (W)	540 W	720 W	985 W
Max Amperage	3.7 amps	4.5 amps	5.5 amps
Start Capacitor	12.5 uF 450V	16 uF 450V	20 uF 450V
Pump materials	Pump sleeve in stainless steel Pressure and suction body and motor support in technopolymer Impeller in AISI 304 stainless steel Diffuser bodies and diffuser in technopolymer Rotor shaft in AISI 304 stainless steel		
Mechanical Seal	Carbon/Ceramic mechanical seal.		
Maximum pressure	Pump maximum pressure 6 bar		
Water temp range	2 - 35°C		
Max Ambient temp	40°C		
Power Cable	2m long 10 amp rated H05 flex with 10 amp AS/NZ 3112 (Type I) 3 pin male power plug		
Weight	10.5 kg	12.5 kg	14.0 kg

6. Electrical Connections

Always use an electrical outlet that is protected by Residual Current Device (RCD) Safety Switch with a trip current of 30mA or less. A Safety switch is required by Australian/New Zealand Standard AU/NZS 60335.1-2011.

The pump is supplied with a 10 amp rated lead and AS/NZ 3112 (Type 1) 3 pin male power plug for connecting to mains power.

Exercise care with the power cord. Route the cord carefully to avoid potential snagging or chafing hazards. Never lift the pump by the power cord or disconnect from the power supply by pulling the cord.

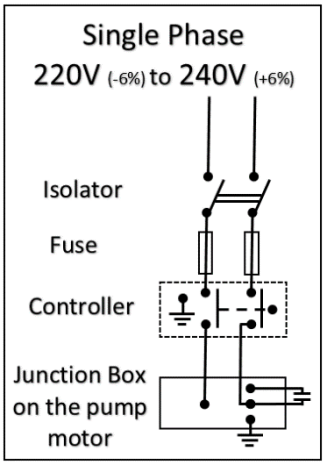

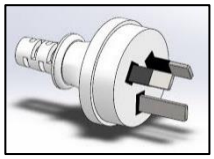

7. Cautions

- Protect the pump from rain and moisture and minimise exposure to extremes of heat or cold. Liquid temp range 2°C - 35°C. Max ambient temp 40°C
- The pump is designed for use with clean water. Contamination including sand or mineral deposits may affect the operation of the pump and controller.
- The pH of the water must be between 6.5 and 8.5.
- This pump is not suitable for use with spa or pool water.
- Running the pump without water or allowing the pump to run dry will damage the mechanical seal and void the warranty.
- Avoid situations where the pump could be exposed to corrosive liquids or gasses, or to flammable materials, solvents etc.
- Fitment and replacement must be carried out by competent, skilled and qualified personnel.

8. General installation notes

Choose a pump location with a firm base as close to your water source as possible and close to a suitable power supply.

Avoid extension cords. If an extension cord must be used ensure it is correctly rated and less than 20m long.

The pump should be housed in a weather proof, free draining, well vented enclosure to protect it from the extremes of temperature, moisture, flooding, chemicals, vermin and insects, dust etc.

Before installation, inspect the pump for any shipping damage.

If solid fittings are used to connect to the pump ensure the pump is mounted securely on a concrete tile, concrete base or similar. If the pump is not mounted securely then flexible piping connectors are recommended.

Avoid strain on the pump casing by supporting your pipework.

9. Intake (suction) piping notes

The intake suction piping is the most critical part of the installation. Errors or air leaks will cause significant issues for performance and pump reliability.

CLAYTECH INOX models generate suction lift
Care must be taken in suction lift situations that the pump does not lose prime.

<u>Reminders of best practice:</u>

Inlets pipe size must be equal to or larger than the inlet port size.

Note that intake pipes which are too small, long or have to lift significantly result in a substantial reduction from the pump rated duty.

Keep inlet piping as short and straight as practical.

If the suction line is quite long fit another isolating valve close by the pump.

A Non-Return Valve in the suction line is recommended.

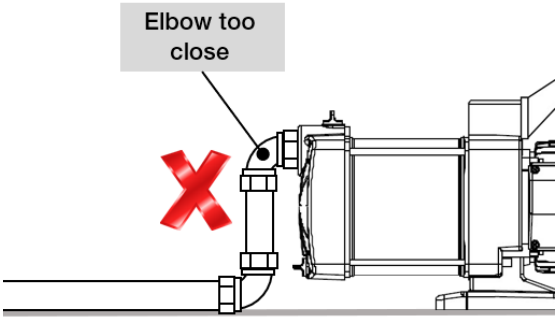

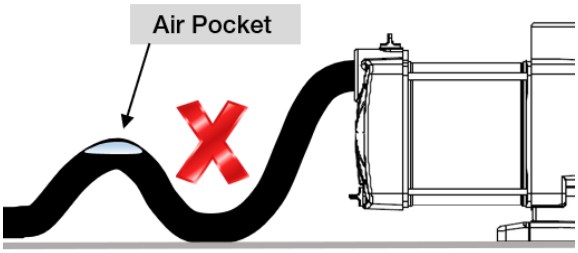

Avoid bends within 150mm of the inlet port.

Avoid pipework which results in air pockets.

Connection to the pump using unions ensures easy removal for servicing.

A gate valve on the pump discharge will aid diagnosing system problems.

Optional: If the water is known to contain particles (sand etc.) an in-line strainer/filter can be fitted. Usually, 500 micron is sufficient. Regular maintenance is required to keep an in-line strainer/filter clean and ensure best pump performance.

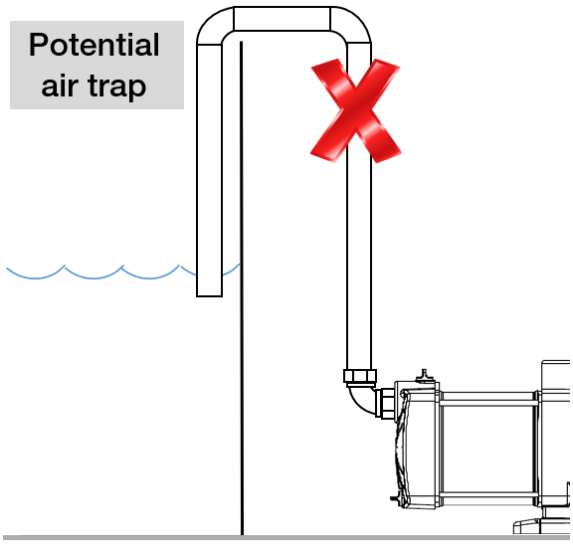

10. Priming and Operation

ClayTech Inox pumps MUST be manually primed (filled) before the pump is started for the first time to ensure the mechanical seal is well lubricated. Dry operation causes irreparable damage to the mechanical seal.

It is very important to ensure no air remains trapped inside the pump body.

Never start a pump until the pump chamber is filled with water.

Loosen the air bleed bung to release trapped air before running

1. Ensure the pump power supply is disconnected.
2. Fill the pump body and suction line completely with clean water
3. Check that the motor fan blade rotates freely.
4. Ensure that the pump inlet line is fully submerged and that the pump will not draw any air into the system.
5. Connect to the power supply and start the pump with a tap open.

   If no water comes out of discharge or there is only limited flow, disconnect the pump from the power source and refill the pump body.

   Restart the pump with a tap open.
6. Once primed satisfactorily, the pump can 'self prime' to depths 4m. A non-return type check valve, or foot valve, in necessary when the water is lower than the pump inlet.

11. Warranties – Terms and Conditions

This warranty is given in addition to the consumer guarantees found within the Australian Competition and Consumer Act 2010 (Cth) for goods purchased in Australia and the Consumer Guarantees Act 1993 NZ for goods purchased in New Zealand:

1) White International Pty Ltd / White International NZ Ltd (White International) warrant that all products distributed are free from defects in workmanship and materials, for their provided warranty period as indicated on the top or opposite side of this document. Subject to the conditions of the warranty, White International will repair any defective products free of charge at the premises of our authorised service agents throughout Australia and New Zealand if a defect in the product appears during the warranty period. If you believe that you have purchased a defective product and wish to make a claim under this warranty, contact us on our Sales Hotline on 1300 783 601, or send your claim to our postal address or fax line below and we will advise you as to how next to proceed. You will be required to supply a copy of your proof of purchase to make a claim under this warranty.

2) This warranty excludes transportation costs to and from White International or its appointed service agents and excludes defects due to non-compliance with installation instructions, neglect or misuse, inadequate protection against the elements, low voltage or use or operation for purposes other than those for which they were designed. For further information regarding the suitability of your intended application contact us on our Sales Hotline on 1300 783 601. If you make an invalid claim under this warranty, the original product will be sent back to you unrepaired.

3) This warranty refers only to products sold after the 1st January 2012, and is not transferable to another product type and only applies to the original owner, purchaser or end user, and is in addition to the consumer guarantees found within the Competition and Consumer Act 2010 (Cth) for goods purchased in Australia and the Consumer Guarantees Act 1993 (NZ) for goods purchased in New Zealand.

4) Our goods come with guarantees that cannot be excluded under the Australian Consumer Law. You are entitled to a replacement or refund for a major failure and for compensation for any other reasonably foreseeable loss or damage. You are also entitled to have the goods repaired or replaced if the goods fail to be of acceptable quality and the failure does not amount to a major failure. 2 YEAR WARRANTY

5) To the fullest extent permitted by law, White International excludes its liability for all other conditions or warranties which would or might otherwise be implied at law. To the fullest extent permitted by law, White International's liability under this warranty and any other conditions, guarantees or warranties at law that cannot be excluded, including those in the Competition and Consumer Act 2010 (Cth), is expressly limited to: (a) in the case of products, the replacement of the product or the supply of equivalent product, the payment of the cost of replacing the product or of acquiring an equivalent product or the repair of the product or payment of the cost of having the product repaired, is at the discretion of White International or a 3rd party tribunal elected under the Competition and Consumer Act 2010 (Cth) for goods purchased in Australia and the Consumer Guarantees Act 1993 (NZ) for goods purchased in New Zealand; and

6) To the fullest extent permitted by law, this warranty supersedes all other warranties attached to the product or its packaging.

7) In the case of services, supplying the services again or the payment of the cost of having the services supplied again, is at the discretion of White International or a 3rd party tribunal elected under the Competition and Consumer Act 2010 (Cth) for goods purchased in Australia and the Consumer Guarantees Act 1993 (NZ) for goods purchased in New Zealand. 8) Our warranty commences from the date of purchase of the above mentioned pumps. Proof of purchase is required before consideration under warranty is given.

Record your date of purchase in the space below and retain this copy for your records.

Date of Purchase .....**Model Purchased** .....

12. Trouble Shooting Guide

	POSSIBLE CAUSE	POTENTIAL SOLUTIONS
The pump won't start and makes no noise	1. No electricity 2. Fuses or RCD tripped 3. Internal motor fault 4. The static head pressure is greater than the cut in setting (applies when commissioning) 5. Controller has sensed dry run and is its auto restart cycle (Failure light slowly flashing)	1. Check the power supply. Is the power LED on the controller illuminated? 2. Fuses or RCD tripped may indicate more serious problems 3. Contact an expert to check the motor 4. Static water head above the controller must be less than cut in pressure 5. Press the controller reset button
The pump doesn't start but makes a noise	1. Motor not free to turn i.e. internal jamming 2. Faulty capacitor	1. Check whether pump can rotate freely 2. Contact an expert to check/replace capacitor
The pump runs but there is no flow or only poor flow	1. Valves closed 2. Air entering suction line (loss of prime) 3. The water lavel may be too low 4. Pump may be worn or damaged 5. Blockages in the pump, suction or discharge 6. In-line filters blocked (if fitted) 7. The piping may be too long or too small	1. Check suction and discharge isolating valves 2. Check for leaks and ensure all joins or fittings are sealed 3. Check water availability 4. Contact your service agent for repair 5. Contact your service agent for repair 6. Clean any filters/strainers in the system 7. Contact your pump professional
The pump runs. There is flow but poor pressure	1. Excessive flow demand 2. Total head requirement too great for the pump 3. Pump may be worn or damaged 4. Air entering suction line reducing performance	1. Check that the pump selected is correct for the application 2. Check the pump specification 3. Contact your service agent 4. Ensure the suction line is sealed correctly
Pump cycling on and off	1. Small water draw off or leak 2. Leak in suction or discharge line 3. Contamination in the controller	1. Check for small leaks i.e. taps or cistern 2. Check for leaks including suction line non return valve 3. Contact your service agent to inspect
Pump runs intermittently	1. Overheating and thermal protection tripping	1. Ensure the water temp is less than 40 deg C. Ensure sufficient airflow to cool the motor. *Note that low voltage can cause the motor to overheat.*
Pump vibrates and is noisy	1. Incorrectly mounted/fixed 2. Internal blockage causing impeller imbalance 3. If the flow requirement is greater than the pump is capable of it will cavitate. *Cavitation sounds like gravel inside pump.*	1. Ensure the pump is solidly attached to a base 2. Contact your service agent 3. Reduce the water demand to see if the noise disappears. Ensure the suction pipe is sized correctly A different pump model may be required Contact your service agent
Water leaking from the centre of the pump	1. The mechanical seal is leaking	1. Contact your service agent for repair

Distributed By:
WHITE®
INTERNATIONAL

www.whiteint.com.au
www.whiteint.co.nz

Please always refer to our website for further technical information & new product innovations

Disclaimer: Every effort has been made to publish the correct information in this manual.
No responsibility will be taken for errors, omissions or changes in product specifications.

© 2024 Copyright White International Pty Ltd

TM ® - WARNING: Please be aware that various brands & products depicted within this document are subject to trademark, patent or design registrations. Infringement of any intellectual property contained within this document without express written authority by the appropriate intellectual property holder may result in further legal action to be taken. For any queries regarding use of the contained information please feel free to contact White International Pty Ltd.